THESE DRAWINGS AND SPECIFICATIONS ARE THE PROPERTY OF JBL INCORPORATED. THEY ARE ISSUED IN STRICT CONFIDENCE AND SHALL NOT BE REPRODUCED OR USED AS THE BASIS FOR MANUFACTURE OR APPARATUS WITHOUT WRITTEN PERMISSION.

ALL MATERIAL SPECIFIED ON THIS DRAWING SHALL CONTINUALLY COMPLY WITH THE EFFECTIVE EU RoHS DIRECTIVE, CURRENTLY 2011/65/EU, INCLUDING ALL AMENDMENTS.

REVISIONS

| LTR | DESCRIPTION | DRFT | DATE | APPR |
|---|---|---|---|---|
| A | INITIAL RELEASE | KW | 11/29/25 | |

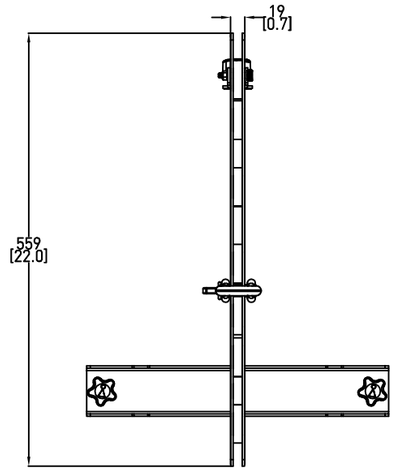


TOP

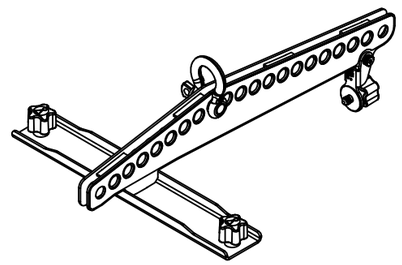

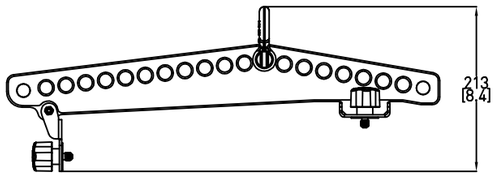


LEFT

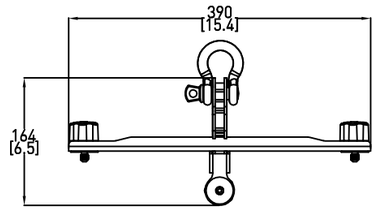


FRONT

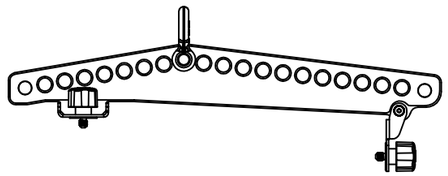

RIGHT

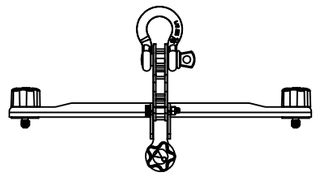

REAR

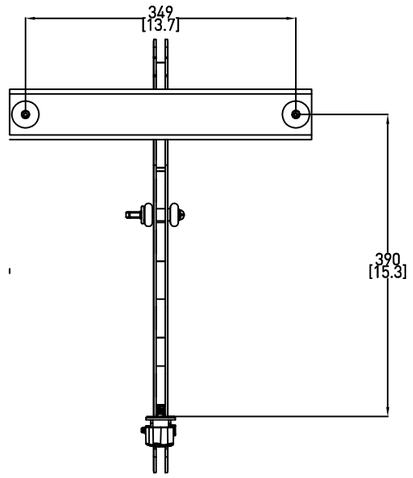


BOTTOM

6. SYMBOL INDICATES CENTER OF GRAVITY (CG).
5. SUSPENSION TYPE (21) Ø17MM HOLES.
4. COMPONENTS: (1) METAL ARRAY FRAME.
(3) KNOB.
(1) 1/2-INCH SHACKLE .
3. WEIGHT: 3.2 KG ( 7 LBS).
2. FINISH: BLACK POWDER COAT.
1. MATERIAL: 3MM THICKNESS STEEL WITH ANTI-CORROSION COATING.

NOTES: (UNLESS OTHERWISE SPECIFIED)

TOLERANCES
(UNLESS OTHERWISE SPECIFIED)
X.XX ± .063 INCH
X.X ± .125 INCH
ANGULAR TOLERANCE OF 0°±30'
FRACTIONAL DIMENSIONS ± 1/32
* DIMENSIONS ARE IN MM [INCHES]
* ALL DIMENSIONS ARE FINISHED DIMENSIONS
* DO NOT SCALE DRAWING

HARMAN

JBL Professional
8500 Balboa Blvd
Northridge, CA 91329
USA

TITLE
CUSTOMER DRAWING: SRX922 AF

| SIZE | DRAWING NO. | REV |
|---|---|---|
| A | 1000386384 | A |

SCALE NTS SHEET 1 OF 1